LM76 ±0.5°C, ±1°C, 12-Bit + Sign Digital Temperature Sensor and Thermal Window Comparator with Two-Wire Interface

Check for Samples: LM76

FEATURES

- **Window Comparison Simplifies Design of ACPI Compatible Temperature Monitoring and Control.**
- **Serial Bus Interface**
- **Separate Open-Drain Outputs for Interrupt and Critical Temperature Shutdown**
- **Shutdown Mode to Minimize Power Consumption**
- **Up to 4 LM76s can be Connected to a Single Bus**
- **12-bit + Sign Output; Full-scale Reading of Over 127°C**

KEY SPECIFICATIONS

- **Supply Voltage 5.0V**
- **Supply Current**
  - **Operating**
    - **250 µA (typ)**
    - **450 µA (max)**
  - **Shutdown**
    - **8 µA (max)**
- **Temperature +25ºC ±0.5ºC (max)**
  - **Accuracy**
    - **–10ºC to +45ºC ±10°C (max)**
    - **70°C to 100°C ±1.0°C (max)**
- **Resolution 0.0625°C**

APPLICATIONS

- **System Thermal Management**
- **Personal Computers**
- **Office Electronics**
- **HVAC**

DESCRIPTION

The LM76 is a digital temperature sensor and thermal window comparator with an I^2C Serial Bus interface with an accuracy of ±1°C. This accuracy for the LM76CHM is specified for a −10°C to 45°C temperature range. The LM76CHM is specified with an accuracy ±0.5°C at 25°C. The window-comparator architecture of the LM76 eases the design of temperature control systems conforming to the ACPI (Advanced Configuration and Power Interface) specification for personal computers. The open-drain Interrupt (INT) output becomes active whenever temperature goes outside a programmable window, while a separate Critical Temperature Alarm (T_CRIT_A) output becomes active when the temperature exceeds a programmable critical limit. The INT output can operate in either a comparator or event mode, while the T_CRIT_A output operates in comparator mode only.

The host can program both the upper and lower limits of the window as well as the critical temperature limit. Programmable hysterisis as well as a fault queue are available to minimize false tripping. Two pins (A0, A1) are available for address selection. The sensor powers up with default thresholds of 2°C T_{HYST}, 10°C T_{LOW}, 64°C T_{HIGH}, and 80°C T_CRIT.

The LM76's 5.0V supply voltage, Serial Bus interface, 12-bit + sign output, and full-scale range of over 127°C make it ideal for a wide range of applications. These include thermal management and protection applications in personal computers, electronic test equipment, office electronics and bio-medical applications.

Please be aware that an important notice concerning availability, standard warranty, and use in critical applications of Texas Instruments semiconductor products and disclaimers thereto appears at the end of this data sheet.

All trademarks are the property of their respective owners.

PRODUCTION DATA information is current as of publication date. Products conform to specifications per the terms of the Texas Instruments standard warranty. Production processing does not necessarily include testing of all parameters.

Copyright © 2000–2013, Texas Instruments Incorporated

Simplified Block Diagram

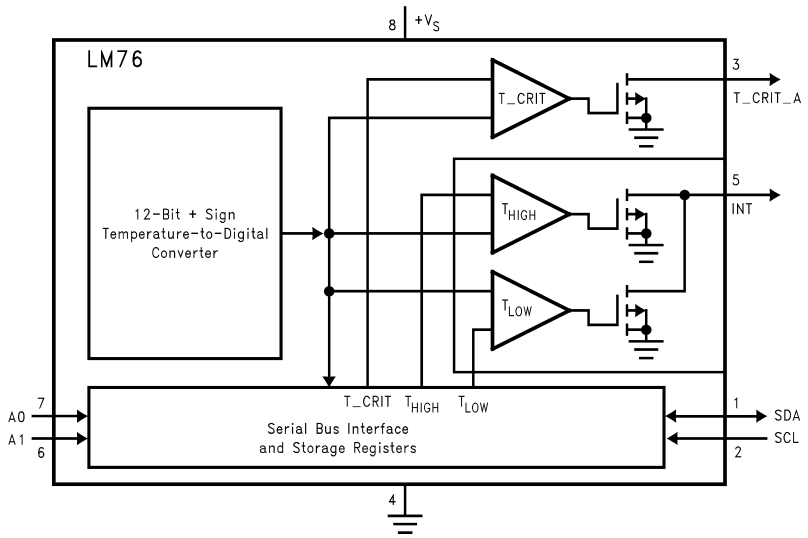

Connection Diagram

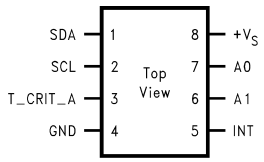

Figure 1. SOIC-8
LM76 See Package Number D

PIN DESCRIPTIONS

Label	Pin #	Function	Typical Connection
SDA	1	Serial Bi-Directional Data Line, Open Drain Output, CMOS Logic Level	Pull Up Resistor, Controller I^2C Data Line
SCL	2	Serial Bus Clock Input, CMOS Logic Level	From Controller I^2C Clock Line
T_CRIT_A	3	Critical Temperature Alarm, Open Drain Output	Pull Up Resistor, Controller Interrupt Line or System Hardware Shutdown
GND	4	Power Supply Ground	Ground
INT	5	Interrupt, Open Drain Output	Pull Up Resistor, Controller Interrupt Line
A0–A1	7, 6	User-Set Address Inputs, TTL Logic Level	Ground (Low, “0”) or $+V_S$ (High, “1”)
$+V_S$	8	Positive Supply Voltage Input	DC Voltage from 3.3V power supply or 5V.

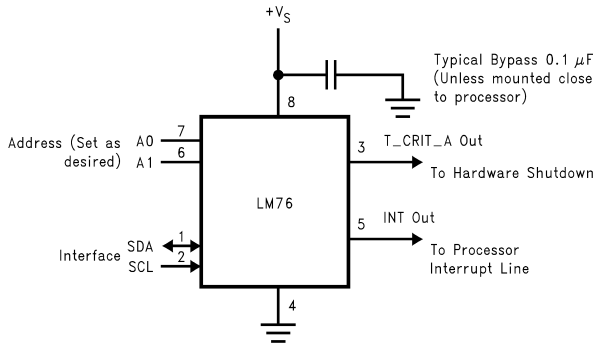

Figure 2. Typical Application

Copyright © 2000–2013, Texas Instruments Incorporated

These devices have limited built-in ESD protection. The leads should be shorted together or the device placed in conductive foam during storage or handling to prevent electrostatic damage to the MOS gates.

Absolute Maximum Ratings[1]

Supply Voltage		−0.3V to 6.5V
Voltage at any Pin		−0.3V to ($+V_S$ + 0.3V)
Input Current at any Pin		5mA
Package Input Current[2]		20mA
T_CRIT_A and INT Output Sink Current		10mA
T_CRIT_A and INT Output Voltage		6.5V
Storage Temperature		−65°C to +125°C
Soldering Information, Lead Temperature		
SOIC Package[3]	Vapor Phase (60 seconds)	215°C
	Infrared (15 seconds)	220°C
ESD Susceptibility [4]	Human Body Model	3000V
	Machine Model	250V

(1) *Absolute Maximum Ratings* indicate limits beyond which damage to the device may occur. DC and AC electrical specifications do not apply when operating the device beyond its rated operating conditions.
(2) When the input voltage (V_I) at any pin exceeds the power supplies (V_I < GND or V_I > $+V_S$) the current at that pin should be limited to 5 mA. The 20 mA maximum package input current rating limits the number of pins that can safely exceed the power supplies with an input current of 5 mA to four.
(3) See AN-450 "Surface Mounting Methods and Their Effect on Product Reliability" or the section titled "Surface Mount" found in a current Texas Instruments Linear Data Book for other methods of soldering surface mount devices.
(4) Human body model, 100 pF discharged through a 1.5 kΩ resistor. Machine model, 200 pF discharged directly into each pin.

Operating Ratings[1][2]

Operating Temperature Range	−55°C to +150°C
Specified Temperature Range[3]	T_{MIN} to T_{MAX}
LM76CHM-5	−20°C to +85°C
Supply Voltage Range ($+V_S$)[4]	+4.5V to +5.5V

(1) *Absolute Maximum Ratings* indicate limits beyond which damage to the device may occur. DC and AC electrical specifications do not apply when operating the device beyond its rated operating conditions.
(2) LM76 θ_{JA} (thermal resistance, junction-to-ambient) when attached to a printed circuit board with 2 oz. foil is 200°C/W.
(3) While the LM76 has a full-scale-range in excess of 128°C, prolonged operation at temperatures above 125°C is not recommended.
(4) The LM76 will operate properly over the $+V_S$ supply voltage range of 3V to 5.5V for the LM76CNM-3 and the LM76CHM-5. The LM76CNM-3 is tested and specified for rated accuracy at the nominal supply voltage of 3.3V. Accuracy of the LM76CNM-3 will degrade 0.2°C for a ±1% variation in $+V_S$ from the nominal value. The LM76CHM-5 is tested and specified for a rated accuracy at the nominal supply voltage of 5.0V. Accuracy of the LM76CHM-5 will degrade 0.08°C for a ±1% variation in $+V_S$ from the nominal value.

Copyright © 2000–2013, Texas Instruments Incorporated

Temperature-to-Digital Converter Characteristics

Unless otherwise noted, these specifications apply for $+V_S$ = +5.0 Vdc ±10% for the LM76CHM-5.[1]. **Boldface limits apply for $T_A = T_J = T_{MIN}$ to T_{MAX};** all other limits $T_A = T_J$ = +25°C, unless otherwise noted.

Parameter	Conditions	Typical[2]	LM76CNM-3 Limits[3]	LM76CHM-5 Limits[3]	Units (Limit)
Accuracy[1]	T_A = +70°C to +100°C		**±1.0**		
	T_A = −20°C to +85°C for LM76CHM-5	±1.5			
	T_A = −10°C to +45°C			**±1.0**	
	T_A = +25°C			±0.5	
Resolution	See[4]	13 0.0625			Bits °C
Temperature Conversion Time	See[5]	400	**500**	**1000**	ms
Quiescent Current	I^2C Inactive	0.25			mA
	I^2C Active	0.25	**0.5**	**0.45**	mA (max)
	Shutdown Mode:	5			µA
			12	**18**	µA (max)
	T_A = +85°C		8		µA (max)
	T_A = +25°C			12	µA (max)
T_{HYST} Default Temperature	See[6][7]	2			°C
T_{LOW} Default Temperature	See[7]	10			°C
T_{HIGH} Default Temperature	See[7]	64			°C
T_{CRIT} Default Temperature	See[7]	80			°C

(1) The LM76 will operate properly over the $+V_S$ supply voltage range of 3V to 5.5V for the LM76CNM-3 and the LM76CHM-5. The LM76CNM-3 is tested and specified for rated accuracy at the nominal supply voltage of 3.3V. Accuracy of the LM76CNM-3 will degrade 0.2°C for a ±1% variation in $+V_S$ from the nominal value. The LM76CHM-5 is tested and specified for a rated accuracy at the nominal supply voltage of 5.0V. Accuracy of the LM76CHM-5 will degrade 0.08°C for a ±1% variation in $+V_S$ from the nominal value.
(2) Typicals are at T_A = 25°C and represent most likely parametric norm.
(3) Limits are ensured to AOQL (Average Outgoing Quality Level).
(4) 12 bits + sign, two's complement
(5) This specification is provided only to indicate how often temperature data is updated. The LM76 can be read at any time without regard to conversion state (and will yield last conversion result). If a conversion is in process it will be interrupted and restarted after the end of the read.
(6) Hysteresis value adds to the T_{LOW} setpoint value (e.g.: if T_{LOW} setpoint = 10°C, and hysteresis = 2°C, then actual hysteresis point is 10+2 = 12°C); and subtracts from the T_{HIGH} and T_CRIT setpoints (e.g.: if T_{HIGH} setpoint = 64°C, and hysteresis = 2°C, then actual hysteresis point is 64−2 = 62°C). For a detailed discussion of the function of hysteresis refer to TEMPERATURE COMPARISON, and Figure 6.
(7) Default values set at power up.

Copyright © 2000–2013, Texas Instruments Incorporated

Logic Electrical Characteristics

DIGITAL DC CHARACTERISTICS Unless otherwise noted, these specifications apply for $+V_S$ = +5.0 Vdc ±10% for the LM76CHM-5. **Boldface limits apply for $T_A = T_J = T_{MIN}$ to T_{MAX};** all other limits $T_A = T_J$ = +25°C, unless otherwise noted.

Symbol	Parameter	Conditions	Typical (1)	Limits (2)	Units (Limit)
$V_{IN(1)}$	SDA and SCL Logical "1" Input Voltage			**$+V_S$ × 0.7**	V (min)
				$+V_S$+0.3	V (max)
$V_{IN(0)}$	SDA and SCL Logical "0" Input Voltage			**−0.3**	V (min)
				$+V_S$ × 0.3	V (max)
$V_{IN(HYST)}$	SDA and SCL Digital Input Hysteresis		500	**250**	mV (min)
$V_{IN(1)}$	A0 and A1 Logical "1" Input Voltage			**2.0**	V (min)
				$+V_S$+0.3	V (max)
$V_{IN(0)}$	A0 and A1 Logical "0" Input Voltage			**−0.3**	V (min)
				0.8	V (max)
$I_{IN(1)}$	Logical "1" Input Current	V_{IN} = + V_S	0.005	**1.0**	µA (max)
$I_{IN(0)}$	Logical "0" Input Current	V_{IN} = 0V	−0.005	**−1.0**	µA (max)
C_{IN}	Capacitance of All Digital Inputs		20		pF
I_{OH}	High Level Output Current	V_{OH} = + V_S		**10**	µA (max)
V_{OL}	Low Level Output Voltage	I_{OL} = 3 mA		**0.4**	V (max)
	T_CRIT_A Output Saturation Voltage	I_{OUT} = 4.0 mA (3)		**0.8**	V (max)
	T_CRIT_A Delay			**1**	Conversions (max)
t_{OF}	Output Fall Time	C_L = 400 pF		**250**	ns (max)
		I_O = 3 mA			

(1) Typicals are at T_A = 25°C and represent most likely parametric norm.
(2) Limits are ensured to AOQL (Average Outgoing Quality Level).
(3) For best accuracy, minimize output loading. Higher sink currents can affect sensor accuracy with internal heating. This can cause an error of 0.64°C at full rated sink current and saturation voltage based on junction-to-ambient thermal resistance.

SERIAL BUS DIGITAL SWITCHING CHARACTERISTICS Unless otherwise noted, these specifications apply for $+V_S$ = +5.0 Vdc ±10% for the LM76CHM-5, CL (load capacitance) on output lines = 80 pF unless otherwise specified. Boldface limits apply for $T_A = T_J = T_{MIN}$ to T_{MAX}; all other limits $T_A = T_J$ = +25°C, unless otherwise noted.

Symbol	Parameter	Conditions	Typical (1)	Limits (2) (3)	Units (Limit)
t_1	SCL (Clock) Period			**2.5**	µs(min)
t_2	Data in Set-Up Time to SCL High			**100**	ns(min)
t_3	Data Out Stable after SCL Low			**0**	ns(min)
t_4	SDA Low Set-Up Time to SCL Low (Start Condition)			**100**	ns(min)
t_5	SDA High Hold Time after SCL High (Stop Condition)			**100**	ns(min)

(1) Typicals are at T_A = 25°C and represent most likely parametric norm.
(2) Limits are ensured to AOQL (Average Outgoing Quality Level).
(3) Timing specifications are tested at the bus input logic levels (Vin(0)=0.3xVA for a falling edge and Vin(1)=0.7xVA for a rising edge) when the SCL and SDA edge rates are similar.

Copyright © 2000–2013, Texas Instruments Incorporated

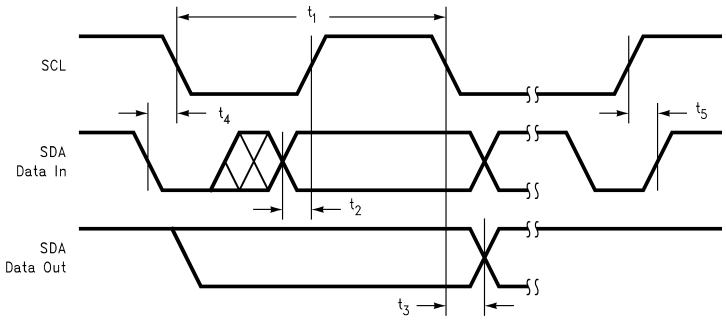

Figure 3. Timing Diagram

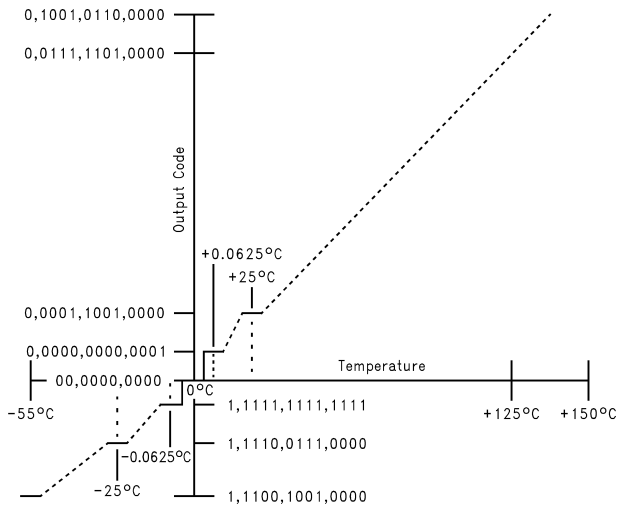

Figure 4. Temperature-to-Digital Transfer Function (Non-linear scale for clarity)

Copyright © 2000–2013, Texas Instruments Incorporated

FUNCTIONAL DESCRIPTION

The LM76 temperature sensor incorporates a band-gap type temperature sensor, 13-bit ADC, and a digital comparator with user-programmable upper and lower limit values. The comparator activates either the INT line for temperatures outside the T_{LOW} and T_{HIGH} window, or the T_CRIT_A line for temperatures which exceed T_CRIT. The lines are programmable for mode and polarity.

TEMPERATURE COMPARISON

LM76 provides a window comparison against a lower (T_{LOW}) and upper (T_{HIGH}) trip point. A second upper trip point (T_CRIT) functions as a critical alarm shutdown. Figure 6 depicts the comparison function as well as the modes of operation.

Status Bits

The internal Status bits operate as follows:

"**True**": Temperature above a T_{HIGH} or T_CRIT is "true" for those respective bits. A "true" for T_{LOW} is temperature below T_{LOW}.

"**False**": Assuming temperature has previously crossed above T_{HIGH} or T_CRIT, then the temperature must drop below the points corresponding T_{HYST}(T_{HIGH} − T_{HYST} or T_CRIT − T_{HYST}) in order for the condition to be false. For T_{LOW}, assuming temperature has previously crossed below T_{LOW}, a "false" occurs when temperature goes above T_{LOW} + T_{HYST}.

The Status bits are not affected by reads or any other actions, and always represent the state of temperature vs. setpoints.

Hardwire Outputs

The T_CRIT_A hardwire output mirrors the T_CRIT_A flag, when the flag is true, the T_CRIT_A output is asserted at all times regardless of mode. Reading the LM76 has no effect on the T_CRIT_A output, although the internal conversion is restarted.

The behavior of the INT hardwire output is as follows:

Comparator Interrupt Mode (Default): User reading part resets output until next measurement completes. If condition is still true, output is set again at end of next conversion cycle. For example, if a user never reads the part, and temperature goes below T_{LOW} then INT becomes active. It would stay that way until temperature goes above T_{LOW} + T_{HYST}. However if the user reads the part, the output would be reset. At the end of the next conversion cycle, if the condition is true, it is set again. If not, it remains reset.

Event Interrupt Mode: User reading part resets output until next condition "event" occurs (in other words, output is only set once for a true condition, if reset by a read, it remains reset until the next triggering threshold has been crossed). Conversely, if a user never read the part, the output would stay set indefinitely after the first event that set the output. An "event" for Event Interrupt Mode is defined as:

1. Transitioning upward across a setpoint, or
2. Transitioning downward across a setpoint's corresponding hysteresis (after having exceeded that setpoint).

For example, if a user never read the part, and temperature went below T_{LOW} then INT would become active. It would stay that way forever if a user never read the part.

However if the user read the part, the output would be reset. Even if the condition is true, it will remain reset. The temperature must cross above T_{LOW} + T_{HYST} to set the output again.

In either mode, reading any register in the LM76 restarts the conversion. This allows a designer to know exactly when the LM76 begins a comparison. This prevents unnecessary Interrupts just after reprogramming setpoints. Typically, system Interrupt inputs are masked prior to reprogramming trip points. By doing a read just after resetting trip points, but prior to unmasking, unexpected Interrupts are prevented.

Avoid programming setpoints so close that their hysteresis values overlap. An example would be that with a T_{HYST} value of 2°C then setting T_{HIGH} and T_{LOW} to within 4°C of each other will violate this restriction. To be more specific, with T_{HYST} set to 2°C assume T_{HIGH} set to 64°C. If T_{LOW} is set equal to, or higher than 60°C this restriction is violated.

Copyright © 2000–2013, Texas Instruments Incorporated

DEFAULT SETTINGS

The LM76 always powers up in a known state. LM76 power up default conditions are:

1. Comparator Interrupt Mode
2. T_{LOW} set to 10°C
3. T_{HIGH} set to 64°C
4. T_CRIT set to 80°C
5. T_{HYST} set to 2°C
6. INT and T_CRIT_A active low
7. Pointer set to “00”; Temperature Register

The LM76 registers will always reset to these default values when the power supply voltage is brought up from zero volts as the supply crosses the voltage level plotted in the following curve. The LM76 registers will reset again when the power supply drops below the voltage plotted in this curve.

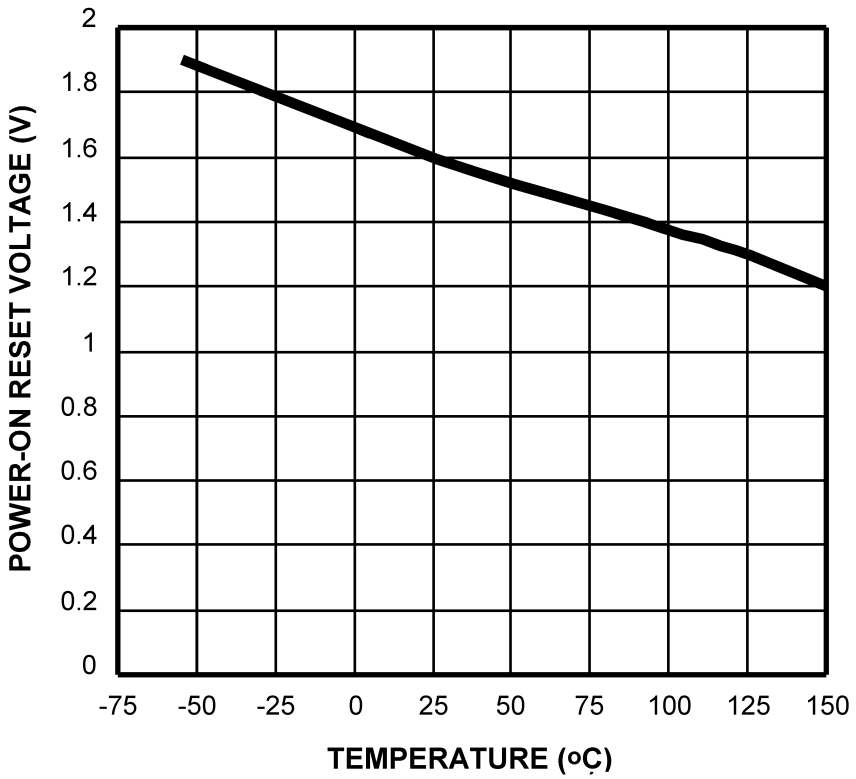

Figure 5. Average Power on Reset Voltage vs Temperature

SERIAL BUS INTERFACE

The LM76 operates as a slave on the Serial Bus, so the SCL line is an input (no clock is generated by the LM76) and the SDA line is a bi-directional serial data line. According to Serial Bus specifications, the LM76 has a 7-bit slave address. The five most significant bits of the slave address are hard wired inside the LM76 and are “10010”. The two least significant bits of the address are assigned to pins A1–A0, and are set by connecting these pins to ground for a low, (0); or to $+V_S$ for a high, (1).

Therefore, the complete slave address is:

1	0	0	1	0	A1	A0
MSB						LSB

Copyright © 2000–2013, Texas Instruments Incorporated

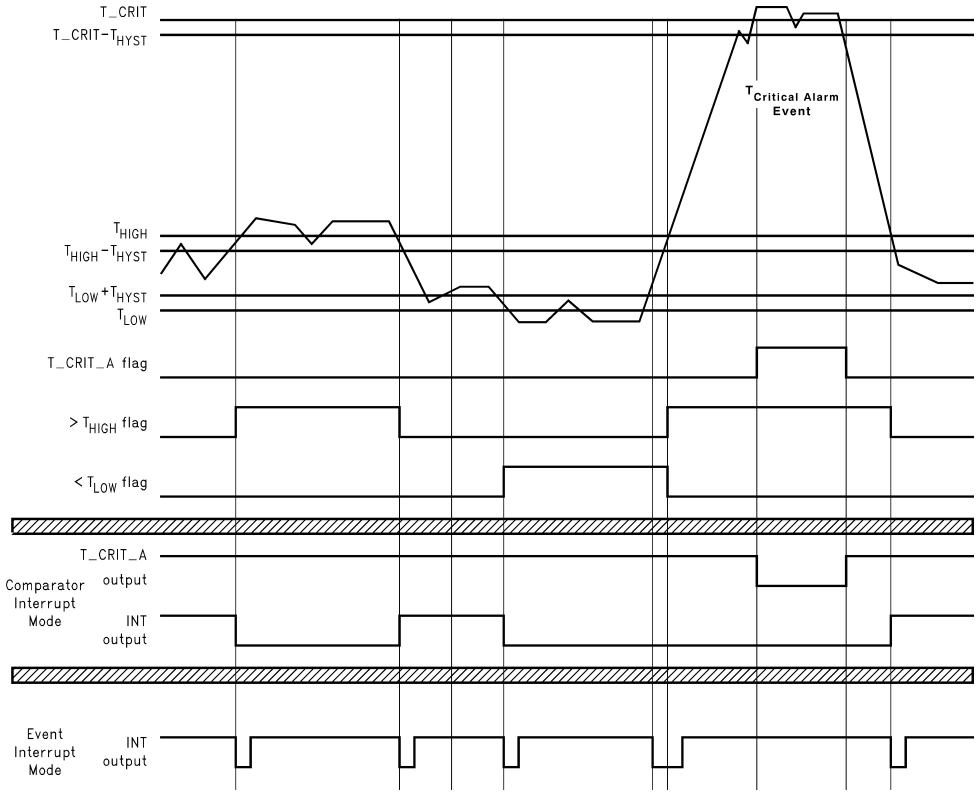

Event Interrupt mode is drawn as if the user is reading the part. If the user doesn't read, the outputs would go low and stay that way until the LM76 is read.

Figure 6. Temperature Response Diagram

TEMPERATURE DATA FORMAT

Temperature data can be read from the Temperature and Set Point registers; and written to the Set Point registers. Temperature data can be read at any time, although reading faster than the conversion time of the LM76 will prevent data from being updated. Temperature data is represented by a 13-bit, two's complement word with an LSB (Least Significant Bit) equal to 0.0625°C:

Temperature	Digital Output	
	Binary	Hex
+130°C	0 1000 0 010 0000	08 20h
+125°C	0 0111 1101 0000	07 D0h
+80°C	0 0101 1010 0000	05 90h
+64°C	0 0100 0000 0000	04 00h
+25°C	0 0001 1001 0000	01 90h
+10°C	0 0000 1010 0000	00 A0h
+2°C	0 0000 0010 0000	00 20h
+0.0625°C	0 0000 0000 0001	00 01h
0°C	00 0000 0000	00 00h
−0.0625°C	1 1111 1111 1111	1F FFh
−25°C	1 1110 0111 0000	1E 70h
−55°C	1 1100 1001 0000	1C 90h

Copyright © 2000–2013, Texas Instruments Incorporated

SHUTDOWN MODE

Shutdown mode is enabled by setting the shutdown bit in the Configuration register via the Serial Bus. Shutdown mode reduces power supply current to 5 µA typical. T_CRIT_A is reset if previously set. Since conversions are stoped during shutdown, T_CRIT_A and INT will not be operational. The Serial Bus interface remains active. Activity on the clock and data lines of the Serial Bus may slightly increase shutdown mode quiescent current. Registers can be read from and written to in shutdown mode. The LM76 takes miliseconds to respond to the shutdown command.

INT AND T_CRIT_A OUTPUT

The INT and T_CRIT_A outputs are open-drain outputs and do not have internal pull-ups. A "high" level will not be observed on these pins until pull-up current is provided from some external source, typically a pull-up resistor. Choice of resistor value depends on many system factors but, in general, the pull-up resistor should be as large as possible. This will minimize any errors due to internal heating of the LM76. The maximum resistance of the pull up, based on LM76 specification for High Level Output Current, to provide a 2 volt high level, is 30K ohms.

FAULT QUEUE

A fault queue of up to 4 faults is provided to prevent false tripping when the LM76 is used in noisy environments. The 4 faults must occur consecutively to set flags as well as INT and T_CRIT_A outputs. The fault queue is enabled by setting bit 4 of the Configuration Register high (see CONFIGURATION REGISTER).

INTERNAL REGISTER STRUCTURE

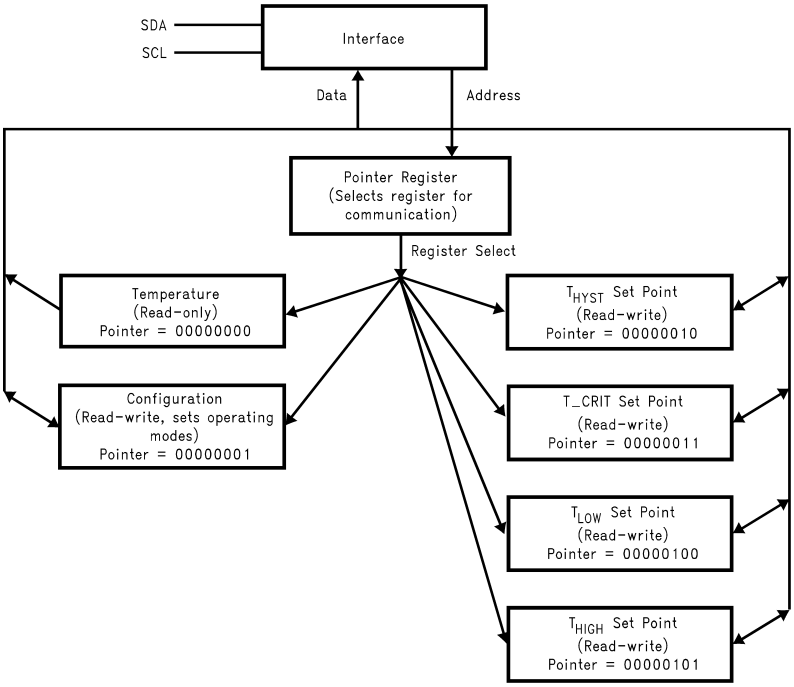

There are four data registers in the LM76, selected by the Pointer register. At power-up the Pointer is set to “00”; the location for the Temperature Register. The Pointer register latches the last location it was set to. In Interrupt Mode, a read from the LM76 resets the INT output. Placing the device in Shutdown mode resets the INT and T_CRIT_A outputs. All registers are read and write, except the Temperature register which is read only.

A write to the LM76 will always include the address byte and the Pointer byte. A write to the Configuration register requires one data byte, while the T_{LOW}, T_{HIGH}, and T_CRIT registers require two data bytes.

Reading the LM76 can take place either of two ways: If the location latched in the Pointer is correct (most of the time it is expected that the Pointer will point to the Temperature register because it will be the data most frequently read from the LM76), then the read can simply consist of an address byte, followed by retrieving the corresponding number of data bytes. If the Pointer needs to be set, then an address byte, pointer byte, repeat start, and another address byte plus required number of data bytes will accomplish a read.

 Copyright © 2000–2013, Texas Instruments Incorporated

The first data byte is the most significant byte with most significant bit first, permitting only as much data as necessary to be read to determine the temperature condition. For instance, if the first four bits of the temperature data indicates a critical condition, the host processor could immediately take action to remedy the excessive temperature. At the end of a read, the LM76 can accept either Acknowledge or No Acknowledge from the Master (No Acknowledge is typically used as a signal for the slave that the Master has read its last byte).

An inadvertent 8-bit read from a 16-bit register, with the D7 bit low, can cause the LM76 to stop in a state where the SDA line is held low as shown in Figure 7. This can prevent any further bus communication until at least 9 additional clock cycles have occurred. Alternatively, the master can issue clock cycles until SDA goes high, at which time issuing a “Stop” condition will reset the LM76.

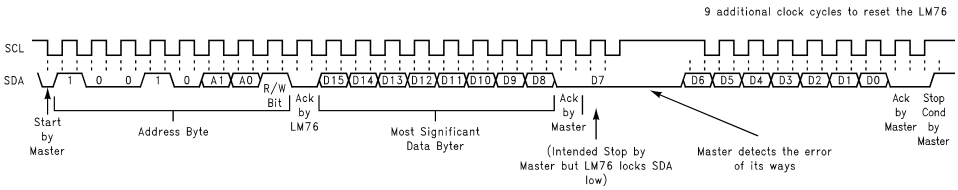

Figure 7. Inadvertent 8-Bit Read from 16-Bit Register where D7 is Zero (“0”)

POINTER REGISTER

(Selects which registers will be read from or written to):

P7	P6	P5	P4	P3	P2	P1	P0
0	0	0	0	0	Register Select		

P0–P2: Register Select:

P2	P1	P0	Register
0	0	0	Temperature (Read only) (Power-up default)-
0	0	1	Configuration (Read/Write)
0	1	0	T_{HYST} (Read/Write)
0	1	1	T_CRIT (Read/Write)
1	0	0	T_{LOW} (Read/Write)
1	0	1	T_{HIGH} (Read/Write)

P3–P7: Must be kept zero.

TEMPERATURE REGISTER

Table 1. (Read Only):

D15	D14	D13	D12	D11	D10	D9	D8	D7	D6	D5	D4	D3	D2	D1	D0
Sign	MSB	Bit 10	Bit 9	Bit 8	Bit 7	Bit 6	Bit 5	Bit 4	Bit 3	Bit 2	Bit 1	Bit 0	CRIT	HIGH	LOW
													Status Bits		

D0–D2: Status Bits

D3–D15: Temperature Data. One LSB = 0.0625°C. Two's complement format.

CONFIGURATION REGISTER

Table 2. (Read/Write):

D7	D6	D5	D4	D3	D2	D1	D0
0	0	0	Fault Queue	INT Polarity	T_CRIT_A Polarity	INT Mode	Shutdown

D0: Shutdown - When set to 1 the LM76 goes to low power shutdown mode. Power up default of “0”.

D1: Interrupt mode - 0 is Comparator Interrupt mode, 1 is Event Interrupt mode. Power up default of “0”.

D2, D3: T_CRIT_A and INT Polarity - 0 is active low, 1 is active high. Outputs are open-drain. Power up default of “0”

D4: Fault Queue - When set to 1 the Fault Queue is enabled, see FAULT QUEUE. Power up default of “0”.

D5–D7: These bits are used for production testing and must be kept zero for normal operation.

T_{HYST}, T_{LOW}, T_{HIGH} AND T_CRIT_A REGISTERS

Table 3. (Read/Write):

D15	D14	D13	D12	D11	D10	D9	D8	D7	D6	D5	D4	D3	D2	D1	D0
Sign	MSB	Bit 10	Bit 9	Bit 8	Bit7	Bit6	Bit5	Bit 4	Bit 3	Bit 2	Bit 1	Bit 0	X	X	X

D0–D2: Undefined

D3–D15: T_{HYST}, T_{LOW}, T_{HIGH} or T_CRIT Trip Temperature Data. Power up default is T_{LOW} = 10°C, T_{HIGH} = 64°C, T_CRIT = 80°C, T_{HYST} = 2°C.

T_{HYST} is subtracted from T_{HIGH}, and T_CRIT, and added to T_{LOW}.

Avoid programming setpoints so close that their hysteresis values overlap. See CONFIGURATION REGISTER .

TEST CIRCUIT DIAGRAMS

I²C Timing Diagrams

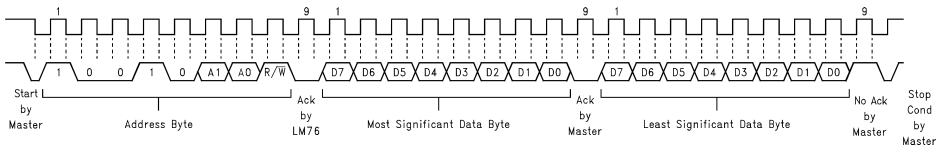

Figure 8. Typical 2-Byte Read From Preset Pointer Location Such as Temp or Comparison Registers

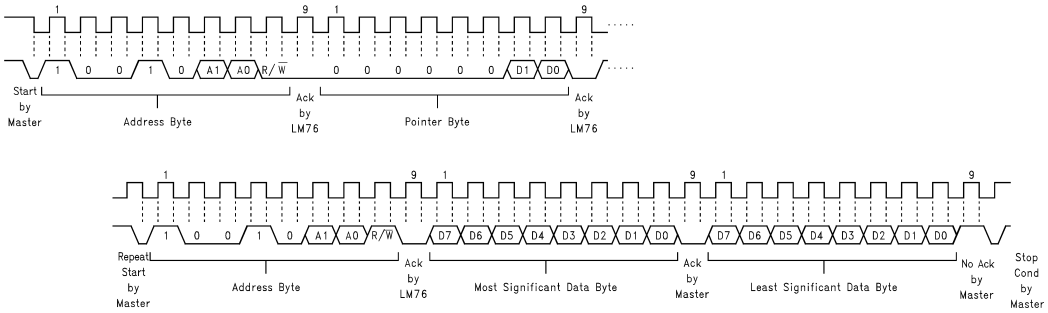

Figure 9. Typical Pointer Set Followed by Immediate Read for 2-Byte Register such as Temp or Comparison Registers

Copyright © 2000–2013, Texas Instruments Incorporated

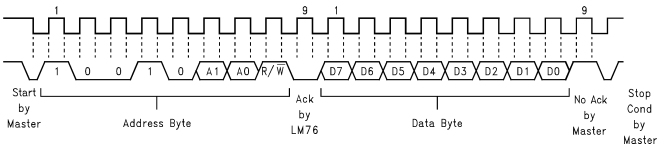

Figure 10. Typical 1-Byte Read from Configuration Register with Preset Pointer

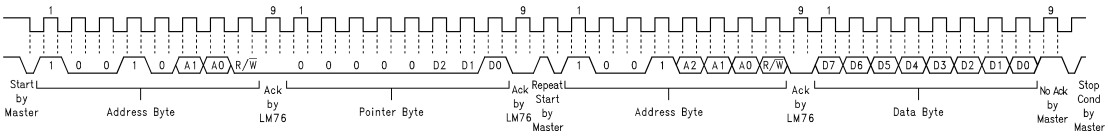

Figure 11. Typical Pointer Set Followed by Immediate Read from Configuration Register

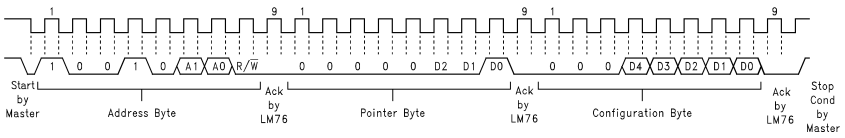

Figure 12. Configuration Register Write

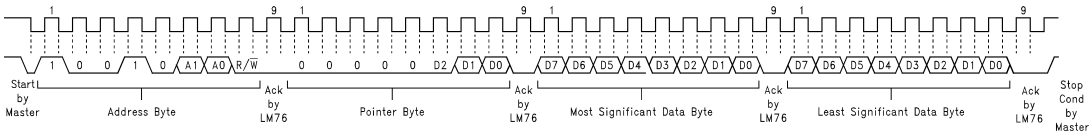

Figure 13. Comparison Register Write

Application Hints

The temperature response graph in Figure 14 depicts a typical application designed to meet ACPI requirements. In this type of application, the temperature scale is given an arbitrary value of "granularity", or the window within which temperature notification events should occur. The LM76 can be programmed to the window size chosen by the designer, and will issue interrupts to the processor whenever the window limits have been crossed. The internal flags permit quick determination of whether the temperature is rising or falling.

The T_CRIT limit would typically use its separate output to activate hardware shutdown circuitry separate from the processor. This is done because it is expected that if temperature has gotten this high that the processor may not be responding. The separate circuitry can then shut down the system, usually by shutting down the power supply.

Note that the INT and T_CRIT_A outputs are separate, but can be wire-or'd together. Alternatively the T_CRIT_A can be diode or'd to the INT line in such a way that a T_CRIT_A event activates the INT line, but an INT event does not activate the T_CRIT_A line. This may be useful in the event that it is desirable to notify both the processor and separate T_CRIT_A shutdown circuitry of a critical temperature alarm at the same time (maybe the processor is still working and can coordinate a graceful shutdown with the separate shutdown circuit).

To implement ACPI compatible sensing it is necessary to sense whenever the temperature goes outside the window, issue an interrupt, service the interrupt, and reprogram the window according to the desired granularity of the temperature scale. The reprogrammed window will now have the current temperature inside it, ready to issue an interrupt whenever the temperature deviates from the current window.

Copyright © 2000–2013, Texas Instruments Incorporated

To understand this graph, assume that at the left hand side the system is at some nominal temperature. For the 1st event temperature rises above the upper window limit, T_{HIGH}, causing INT to go active. The system responds to the interrupt by querying the LM76's status bits and determines that T_{HIGH} was exceeded, indicating that temperature is rising. The system then reprograms the temperature limits to a value higher by an amount equal to the desired granularity. Note that in Event Interrupt Mode, reprogramming the limits has caused a second, known, interrupt to be issued since temperature has been returned within the window. In Comparator Interrupt Mode, the LM76 simply stops issuing interrupts.

The 2nd event is another identical rise in temperature. The 3rd event is typical of a drop in temperature. This is one of the conditions that demonstrates the power of the LM76, as the user receives notification that a lower limit is exceeded in such a way that temperature is dropping.

The Critical Alarm Event activates the separate T_CRIT_A output. Typically, this would feed circuitry separate from the processor on the assumption that if the system reached this temperature, the processor might not be responding.

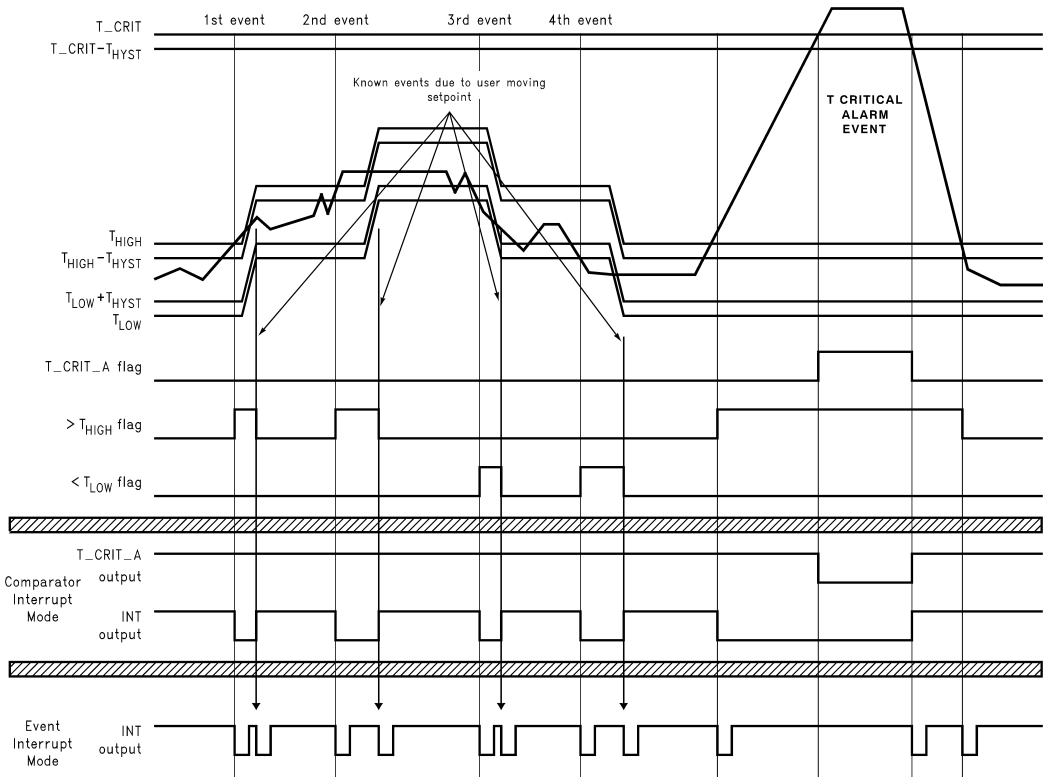

Note: Event Interrupt mode is drawn as if the user is reading the part. If the user doesn't read, the outputs would go low and stay that way until the LM76 is read.

Figure 14. Temperature Response Diagram for ACPI Implementation

Copyright © 2000–2013, Texas Instruments Incorporated

Typical Applications

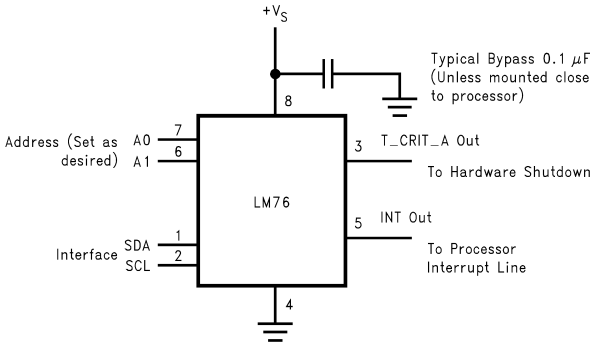

Figure 15. Typical Application

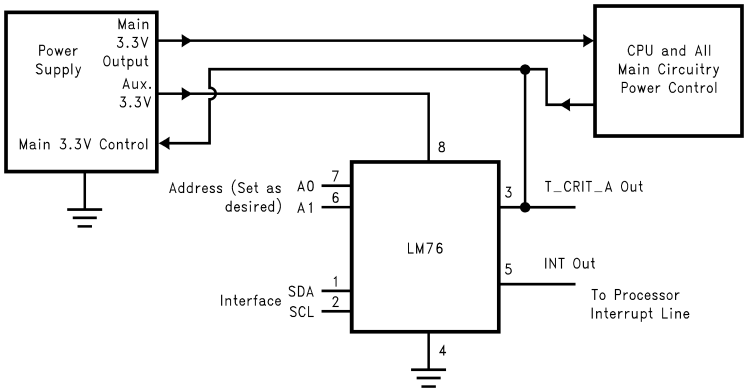

Figure 16. ACPI Compatible Terminal Alarm Shutdown

By powering the LM76 from auxiliary output of the power supply, a non-functioning overheated computer can be powered down to preserve as much of the system as possible.

REVISION HISTORY

Changes from Revision D (March 2013) to Revision E	Page
• Changed layout of National Data Sheet to TI format	15

Copyright © 2000–2013, Texas Instruments Incorporated

PACKAGING INFORMATION

Orderable Device	Status (1)	Package Type	Package Drawing	Pins	Package Qty	Eco Plan (2)	Lead/Ball Finish (6)	MSL Peak Temp (3)	Op Temp (°C)	Device Marking (4/5)	Samples
LM76CHM-5	NRND	SOIC	D	8	95	TBD	Call TI	Call TI	-55 to 150	LM76 CHM-5	
LM76CHM-5/NOPB	ACTIVE	SOIC	D	8	95	Green (RoHS & no Sb/Br)	CU SN	Level-1-260C-UNLIM	-55 to 150	LM76 CHM-5	Samples
LM76CHMX-5/NOPB	ACTIVE	SOIC	D	8	2500	Green (RoHS & no Sb/Br)	CU SN	Level-1-260C-UNLIM	-55 to 150	LM76 CHM-5	Samples

(1) The marketing status values are defined as follows:
ACTIVE: Product device recommended for new designs.
LIFEBUY: TI has announced that the device will be discontinued, and a lifetime-buy period is in effect.
NRND: Not recommended for new designs. Device is in production to support existing customers, but TI does not recommend using this part in a new design.
PREVIEW: Device has been announced but is not in production. Samples may or may not be available.
OBSOLETE: TI has discontinued the production of the device.

(2) Eco Plan - The planned eco-friendly classification: Pb-Free (RoHS), Pb-Free (RoHS Exempt), or Green (RoHS & no Sb/Br) - please check http://www.ti.com/productcontent for the latest availability information and additional product content details.
TBD: The Pb-Free/Green conversion plan has not been defined.
Pb-Free (RoHS): TI's terms "Lead-Free" or "Pb-Free" mean semiconductor products that are compatible with the current RoHS requirements for all 6 substances, including the requirement that lead not exceed 0.1% by weight in homogeneous materials. Where designed to be soldered at high temperatures, TI Pb-Free products are suitable for use in specified lead-free processes.
Pb-Free (RoHS Exempt): This component has a RoHS exemption for either 1) lead-based flip-chip solder bumps used between the die and package, or 2) lead-based die adhesive used between the die and leadframe. The component is otherwise considered Pb-Free (RoHS compatible) as defined above.
Green (RoHS & no Sb/Br): TI defines "Green" to mean Pb-Free (RoHS compatible), and free of Bromine (Br) and Antimony (Sb) based flame retardants (Br or Sb do not exceed 0.1% by weight in homogeneous material)

(3) MSL, Peak Temp. - The Moisture Sensitivity Level rating according to the JEDEC industry standard classifications, and peak solder temperature.

(4) There may be additional marking, which relates to the logo, the lot trace code information, or the environmental category on the device.

(5) Multiple Device Markings will be inside parentheses. Only one Device Marking contained in parentheses and separated by a "~" will appear on a device. If a line is indented then it is a continuation of the previous line and the two combined represent the entire Device Marking for that device.

(6) Lead/Ball Finish - Orderable Devices may have multiple material finish options. Finish options are separated by a vertical ruled line. Lead/Ball Finish values may wrap to two lines if the finish value exceeds the maximum column width.

Important Information and Disclaimer: The information provided on this page represents TI's knowledge and belief as of the date that it is provided. TI bases its knowledge and belief on information provided by third parties, and makes no representation or warranty as to the accuracy of such information. Efforts are underway to better integrate information from third parties. TI has taken and

continues to take reasonable steps to provide representative and accurate information but may not have conducted destructive testing or chemical analysis on incoming materials and chemicals.
TI and TI suppliers consider certain information to be proprietary, and thus CAS numbers and other limited information may not be available for release.

In no event shall TI's liability arising out of such information exceed the total purchase price of the TI part(s) at issue in this document sold by TI to Customer on an annual basis.

TAPE AND REEL INFORMATION

REEL DIMENSIONS

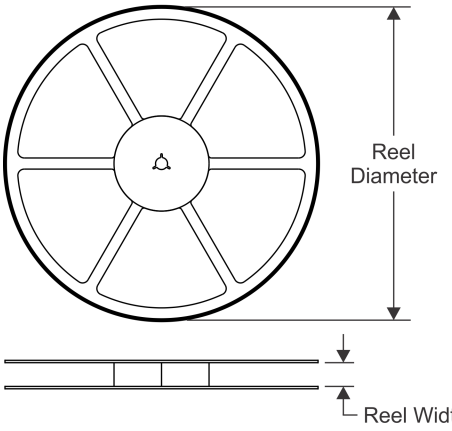

TAPE DIMENSIONS

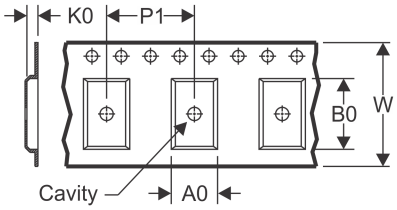

A0	Dimension designed to accommodate the component width
B0	Dimension designed to accommodate the component length
K0	Dimension designed to accommodate the component thickness
W	Overall width of the carrier tape
P1	Pitch between successive cavity centers

QUADRANT ASSIGNMENTS FOR PIN 1 ORIENTATION IN TAPE

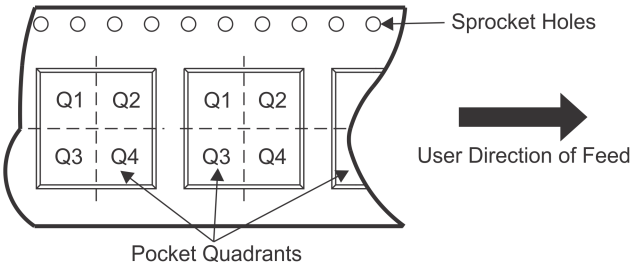

*All dimensions are nominal

Device	Package Type	Package Drawing	Pins	SPQ	Reel Diameter (mm)	Reel Width W1 (mm)	A0 (mm)	B0 (mm)	K0 (mm)	P1 (mm)	W (mm)	Pin1 Quadrant
LM76CHMX-5/NOPB	SOIC	D	8	2500	330.0	12.4	6.5	5.4	2.0	8.0	12.0	Q1

TAPE AND REEL BOX DIMENSIONS

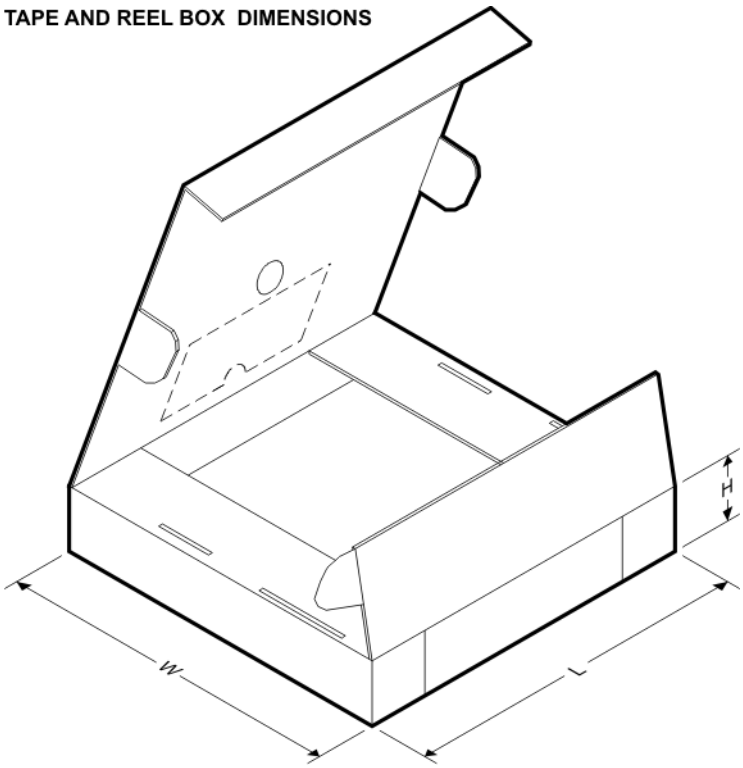

*All dimensions are nominal

Device	Package Type	Package Drawing	Pins	SPQ	Length (mm)	Width (mm)	Height (mm)
LM76CHMX-5/NOPB	SOIC	D	8	2500	367.0	367.0	35.0

D (R–PDSO–G8) PLASTIC SMALL OUTLINE

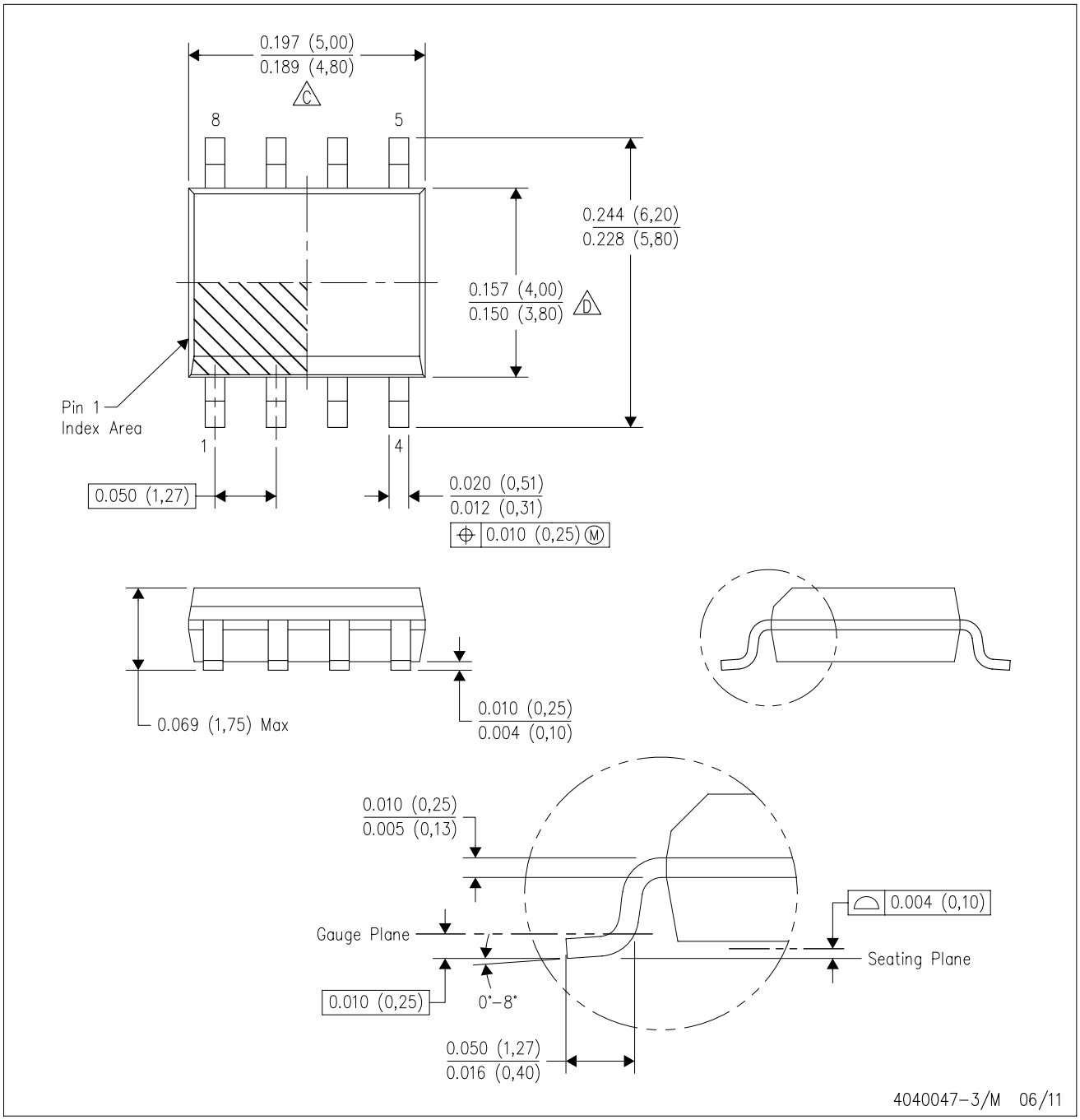

NOTES:
A. All linear dimensions are in inches (millimeters).
B. This drawing is subject to change without notice.
C. Body length does not include mold flash, protrusions, or gate burrs. Mold flash, protrusions, or gate burrs shall not exceed 0.006 (0,15) each side.
D. Body width does not include interlead flash. Interlead flash shall not exceed 0.017 (0,43) each side.
E. Reference JEDEC MS–012 variation AA.

IMPORTANT NOTICE

Texas Instruments Incorporated and its subsidiaries (TI) reserve the right to make corrections, enhancements, improvements and other changes to its semiconductor products and services per JESD46, latest issue, and to discontinue any product or service per JESD48, latest issue. Buyers should obtain the latest relevant information before placing orders and should verify that such information is current and complete. All semiconductor products (also referred to herein as “components”) are sold subject to TI’s terms and conditions of sale supplied at the time of order acknowledgment.

TI warrants performance of its components to the specifications applicable at the time of sale, in accordance with the warranty in TI’s terms and conditions of sale of semiconductor products. Testing and other quality control techniques are used to the extent TI deems necessary to support this warranty. Except where mandated by applicable law, testing of all parameters of each component is not necessarily performed.

TI assumes no liability for applications assistance or the design of Buyers’ products. Buyers are responsible for their products and applications using TI components. To minimize the risks associated with Buyers’ products and applications, Buyers should provide adequate design and operating safeguards.

TI does not warrant or represent that any license, either express or implied, is granted under any patent right, copyright, mask work right, or other intellectual property right relating to any combination, machine, or process in which TI components or services are used. Information published by TI regarding third-party products or services does not constitute a license to use such products or services or a warranty or endorsement thereof. Use of such information may require a license from a third party under the patents or other intellectual property of the third party, or a license from TI under the patents or other intellectual property of TI.

Reproduction of significant portions of TI information in TI data books or data sheets is permissible only if reproduction is without alteration and is accompanied by all associated warranties, conditions, limitations, and notices. TI is not responsible or liable for such altered documentation. Information of third parties may be subject to additional restrictions.

Resale of TI components or services with statements different from or beyond the parameters stated by TI for that component or service voids all express and any implied warranties for the associated TI component or service and is an unfair and deceptive business practice. TI is not responsible or liable for any such statements.

Buyer acknowledges and agrees that it is solely responsible for compliance with all legal, regulatory and safety-related requirements concerning its products, and any use of TI components in its applications, notwithstanding any applications-related information or support that may be provided by TI. Buyer represents and agrees that it has all the necessary expertise to create and implement safeguards which anticipate dangerous consequences of failures, monitor failures and their consequences, lessen the likelihood of failures that might cause harm and take appropriate remedial actions. Buyer will fully indemnify TI and its representatives against any damages arising out of the use of any TI components in safety-critical applications.

In some cases, TI components may be promoted specifically to facilitate safety-related applications. With such components, TI’s goal is to help enable customers to design and create their own end-product solutions that meet applicable functional safety standards and requirements. Nonetheless, such components are subject to these terms.

No TI components are authorized for use in FDA Class III (or similar life-critical medical equipment) unless authorized officers of the parties have executed a special agreement specifically governing such use.

Only those TI components which TI has specifically designated as military grade or “enhanced plastic” are designed and intended for use in military/aerospace applications or environments. Buyer acknowledges and agrees that any military or aerospace use of TI components which have ***not*** been so designated is solely at the Buyer's risk, and that Buyer is solely responsible for compliance with all legal and regulatory requirements in connection with such use.

TI has specifically designated certain components as meeting ISO/TS16949 requirements, mainly for automotive use. In any case of use of non-designated products, TI will not be responsible for any failure to meet ISO/TS16949.

Products		**Applications**	
Audio	www.ti.com/audio	Automotive and Transportation	www.ti.com/automotive
Amplifiers	amplifier.ti.com	Communications and Telecom	www.ti.com/communications
Data Converters	dataconverter.ti.com	Computers and Peripherals	www.ti.com/computers
DLP® Products	www.dlp.com	Consumer Electronics	www.ti.com/consumer-apps
DSP	dsp.ti.com	Energy and Lighting	www.ti.com/energy
Clocks and Timers	www.ti.com/clocks	Industrial	www.ti.com/industrial
Interface	interface.ti.com	Medical	www.ti.com/medical
Logic	logic.ti.com	Security	www.ti.com/security
Power Mgmt	power.ti.com	Space, Avionics and Defense	www.ti.com/space-avionics-defense
Microcontrollers	microcontroller.ti.com	Video and Imaging	www.ti.com/video
RFID	www.ti-rfid.com		
OMAP Applications Processors	www.ti.com/omap	**TI E2E Community**	e2e.ti.com
Wireless Connectivity	www.ti.com/wirelessconnectivity		

Mailing Address: Texas Instruments, Post Office Box 655303, Dallas, Texas 75265
Copyright © 2013, Texas Instruments Incorporated